Collar

single slit

optional full stainless steel version

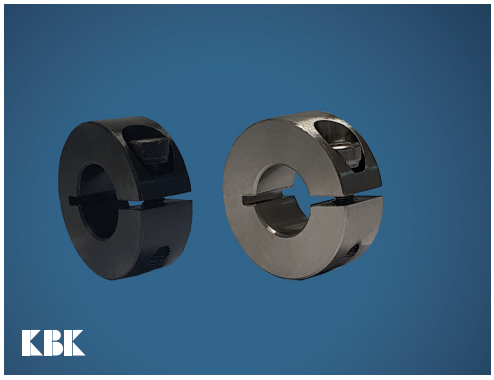

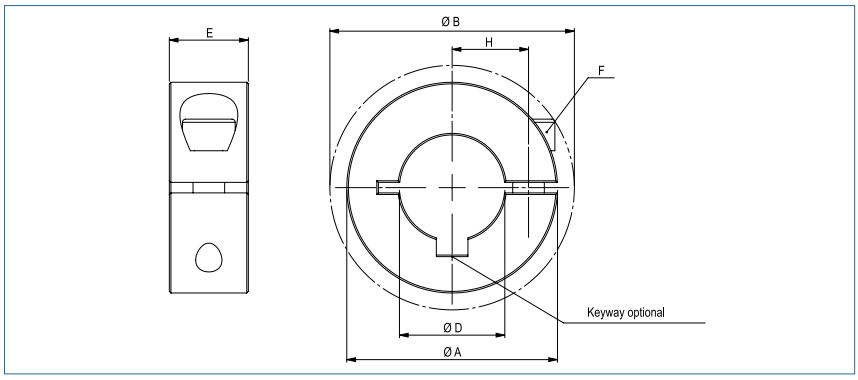

Order Code	**KR**	**-**	**28**	**steel blackened**
	Type		Size	
Order Code	**KR-VA**	**-**	**28**	**stainless steel**
	Type		Size	

Collar single slit											
Size	axial force N		Dimensions					F Screw (ISO4762)	Tightening Torque Screws Nm		Mass kg
	steel	stainless steel (VA)	Standard Bore D / H7	A mm	H mm	E mm	B mm		steel	stainless steel (VA)	
4	1525	867	4	16	5	9	20.7	M3x8	2	1.3	0.010
5	1525	867	5	16	5	9	20.7	M3x8	2	1.3	0.011
6	1525	867	6	16	5	9	20.7	M3x8	2	1.3	0.011
8	1525	867	8	18	6	9	22.4	M3x8	2	1.3	0.012
10	1335	758	10	24	8	9	26	M3x10	2	1.3	0.022
12	2415	1398	12	28	9.5	11	31.8	M4x12	5	3	0.039
15	3940	2288	15	34	12	13	39.4	M5x16	10	6	0.065
16	3940	2288	16	34	12	13	39.4	M5x16	10	6	0.063
18	3803	2208	18	36	13	13	41.1	M5x16	10	6	0.069
20	5540	4612	20	40	14.5	15	46.4	M6x18	15	10	0.097
22	5378	4477	22	42	15.5	15	48.1	M6x18	15	10	0.103
25	5236	4358	25	45	16.5	15	50.8	M6x18	15	10	0.144
28	5053	4206	28	48	18	15	53.7	M6x18	15	10	0.123
30	4809	4003	30	54	21	15	58.6	M6x18	15	10	0.163
40	4468	3719	40	60	25	15	65	M6x18	15	10	0.163
50	8135	4729	50	78	32	19	87	M8x25	42	25	0.386

Bore tolerance	H7
Material	steel blackened stainless steel blank
Keyway	optional acc. DIN 6885
Temperature Range	-40 °C ~ 175 °C